LOT # 2 (E) TURBAT

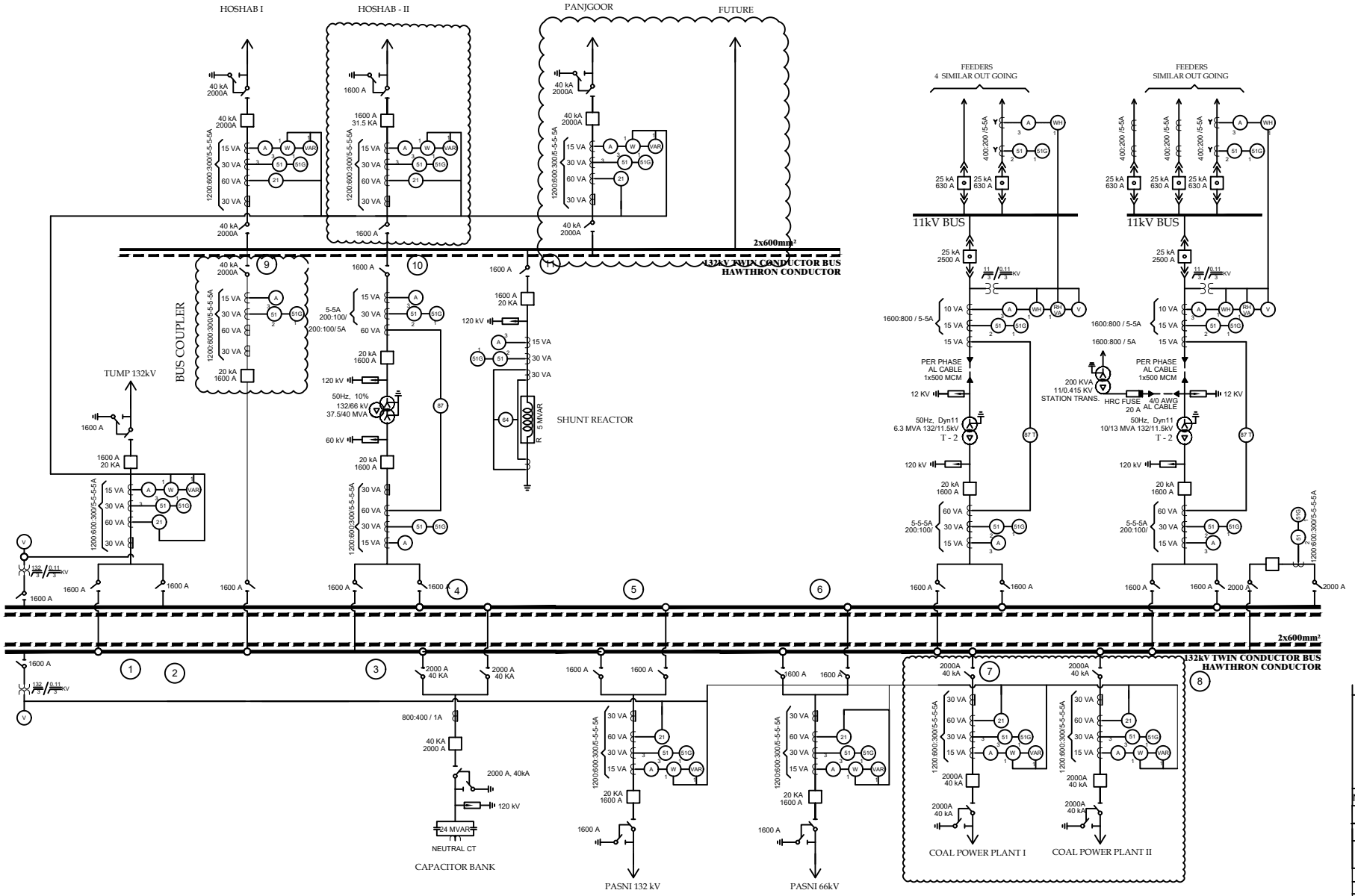

LEGEND :-

- ISOLATOR
- EARTHING BLADE
- POWER CIRCUIT BREAKER
- DRAW OUT TYPE CIRCUIT BREAKER
- CURENT TRANSFORMER
- POTENTIAL TRANSFORMER
- LIGHTNING ARRESTOR
- POWER CABLE
- TWO WINDING TRANSFORMER
- RELAY (NO IN SYMBOL INDICATES FUNCTION)
- 51 OVER CURRENT RELAY
- 51G EARTH FAULT RELAY
- 21 DISTANCE RELAY
- 87 T DIFFERENTIAL RELAY
- A AMMETER
- W WATT METER
- VAR VAR METER
- V VOLT METER
- VARH VAR HOUR METER
- WH WATT HOUR METER
- HRC FUSE
- PF POWER FACTOR METER
- 64 RESTRICTED EARTH FAULT RELAY

NOTE:

1. **PREPARED FROM WAPDA S/L DRAWING NO. PDW/TE -113 DT 29-08-1988.**
2. **FOR EARLIER REVISIONS REFER TO WAPDA GLO DWG NO PDW/TS-3861 DT. 13-05-1989.**

PROPOSED:

NO.	DATE	REVISION	BY
1.	17-01-20	ADDED 4 NO. 132kV LINE BAYS, (2 FOR COAL POWER PLANT , 1 FOR PANJGOOR G/S, 1 FOR HOSHAB G/S). ADDED 1 NO B/S COUPLER BAY. CONVERSION OF 132kV BUS INTO TWIN BUNDLE CONDUCTOR. EXTENDED 132kV BUS FOR 2 - BAYS.	EnMasse

CLIENT:- **QESCO**

CONSULTANT :- **EnMasse**

EXISTING: 4 NO. 132kV LINE BAYS, 3 NO T/F BAYS, 1 NO SHUNT REACTOR, 1 NO CAP. BANK.

	NAME	SIG.
PREPARED	MM	
CHECKED	HA	
APPROVED	CAL	

TITLE :- **132kV TURBAT GRID SUB-STATION SINGLE LINE DIAGRAM**

SCALE:- N T S | DRAWING NO. SL-03 | DATE: